KLT30F Series

30 WATT, Universal Input
Open Frame Switching Power Supply

2 years Warranty

FEATURES

- TRIPLE OUTPUTS
- LOW COST
- OPEN FRAME
- UNIVERSAL INPUT
- OVERVOLTAGE PROTECTION
- OVERCURRENT PROTECTION
- COMPACT, LOW-PROFILE PACKAGES
- 3 YEAR WARRANTY
- OPTIONAL CHASSIS AND COVER

SAFETIES/APPROVALS

UL60950
CSA C22.2 No. 60950(cUL)
CE EN60950 3rd Edition (LVD)

ELECTRICAL SPECIFICATIONS

All specifications are typical at nominal input, full load

INPUT SPECIFICATIONS

Input Voltage…….....85 ~ 264VAC
Input Frequency..... 47 ~ 63Hz
Input Current……0.8A Typ.
Inrush Current……...15A

OUTPUT SPECIFICATIONS

Output Voltage ……See Chart
Efficiency……70% Typ.
Over-Voltage Protection……CH1 only. Zener Limiter
Over-Current Protection……....Automatic Recovery
Ripple and Noise……See Chart
Hold-Up Time.....……....20 mS
Load Regulation.....……..**CH1** – 100mV
CH2, CH3 – 120mV
Rise Time.....……...100mS
Leakage Current .....**100V –** 0.5mArms
230V – 0.75mArms
Drift (8H, after 1H)……..0.5% +15 mV

GENERAL SPECIFICATIONS

Isolation Voltage
Primary to Secondary……3000VAC
Primary to Case……1500VAC
Secondary to Case……500VAC
Isolation Resistance……100 M-Ohms min.

ENVIRONMENTAL SPECIFICATIONS

Operating Temperature .....……0°C ~ +60°C
Cooling…….....Convection
Temperature Coefficient..... 0.02% / °C
Humidity…….....20 ~ 85%Rh (non-condensing)
Storage Temperature……..-20°C ~ +85°C
Shock Vibration……Shock: 20G(3 Directions each 3 times)
Vibration: 10 ~ 55Hz

PHYSICAL SPECIFICATIONS

Open Frame

MODEL	OUTPUT 1		OUTPUT 2		OUTPUT 3		Ripple & Noise (mVp-p)
KLT30F-0522	+5V	4.0A	+12V	1.2A	-12V	0.5A	150mVp-p
KLT30F-0533	+5V	4.0A	+15V	1.0A	-15V	0.5A	150mVp-p

MAX POWER NOT TO EXCEED 15WATTS

KLT30F

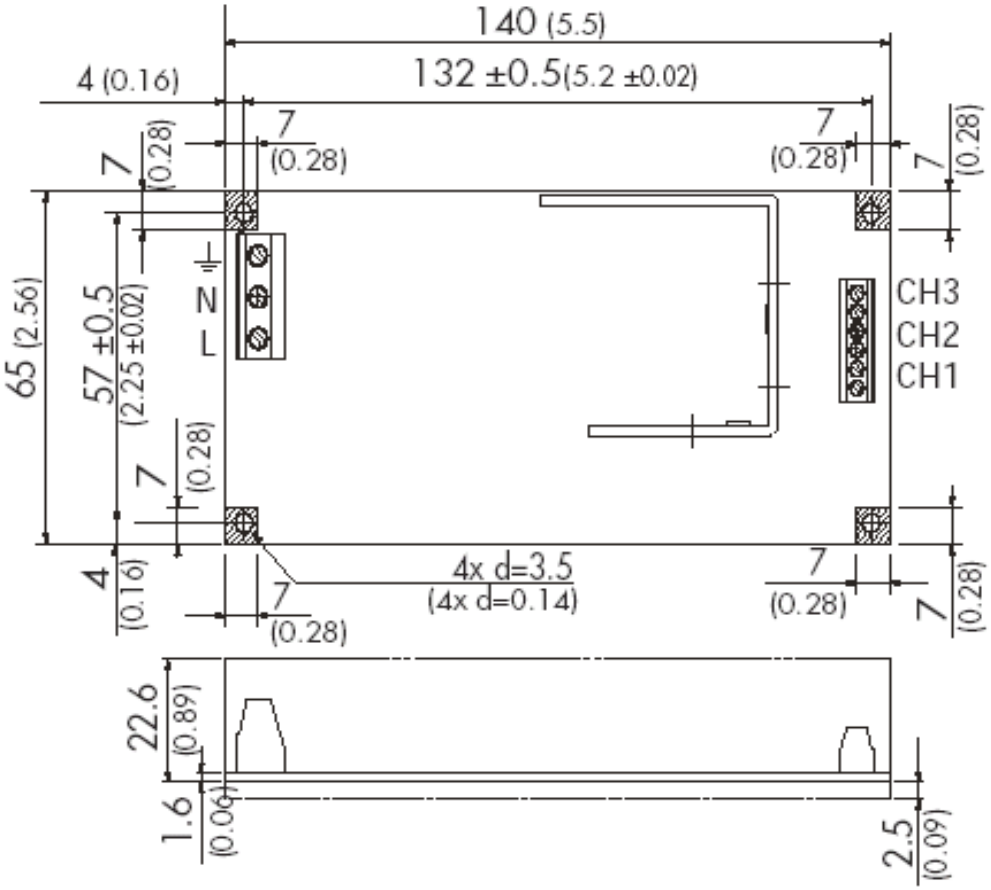

Note:

- **Phoenix connector shown. JST and Molex connectors available.**
- Measurements in millimeter (mm) unless otherwise specified
- Tolerance ± 1mm

NOTE:
All specifications typical and nominal / full load and 25°C unless otherwise noted.
Avoid sustained operation in overload or dead short conditions.
Specifications subject to changes without notice.