PACKAGE OUTLINE

BRIDGE

KBU

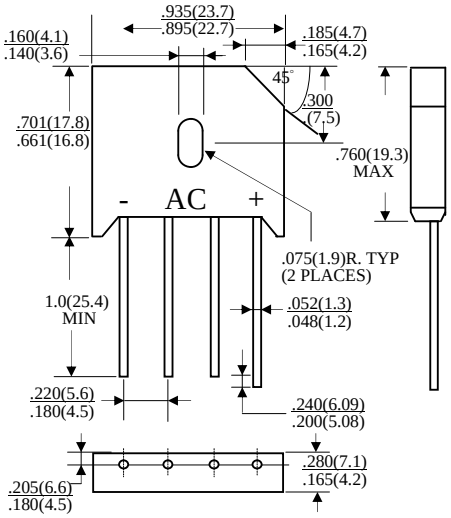

Dimensions in inches and (millimeters)

BR-3/BR-6

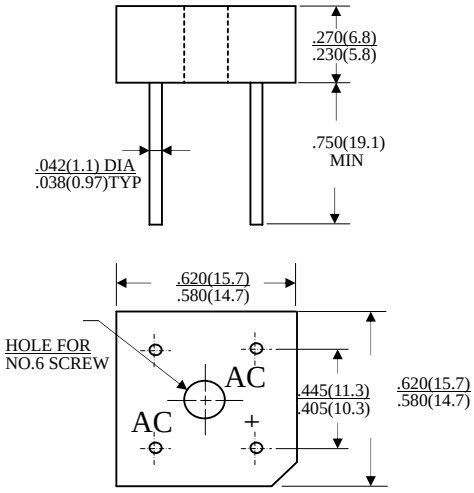

Dimensions in inches and (millimeters)

BR-8/BR-10

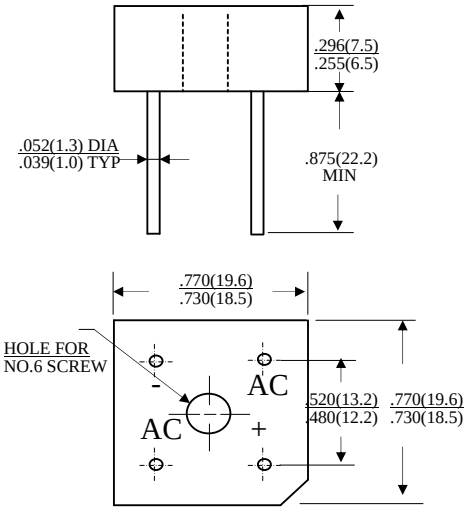

Dimensions in inches and (millimeters)

KBPC-W

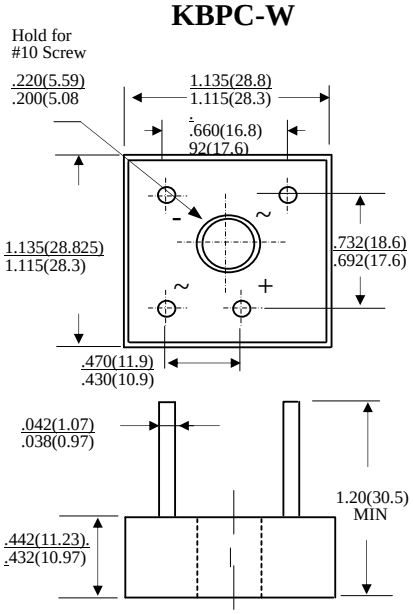

Dimensions in inches and (millimeters)